МЕТАЛЛОПРОДУКТЫ WWW.KARTER.RU	Installation manual	Model: Audi TT with AT	Skid plate for: engine bay and transmission case	Article: 02.0701/02.0724
	Body type: 8J3; 8N3	Years: 1998 - 2006	Engine type: 1,8; 2,0	

Engine bay and transmission elements skid plate has been designed and manufactured by LLC Metalloproduktsia. Product conforms to TOR 4591-001-25888788-2006 requirements. Product design is protected by model copyright certificates №89059, 15980, 15981, 15982, 15983. Patented in Russian Federation.

APPLICATION:

Protection of engine bay and transmission elements from mechanical deformation.
Protection of engine bay and transmission elements from dust and damp.

INSTALLATION:

Engine bay and transmission elements skid plate has been designed particularly for a certain vehicle. It should be mounted according to the producer's installation instruction by a dedicated dealer or on certified service stations. The skid plate is fixed to regular apertures located on vehicle's body load-bearing elements. In case of correct installation the skid plate should not interfere with any vehicle's units and components.

INSTALLATION MANUAL:

1. Disassemble the skid plate to component parts.
2. Install the clamp over the transversal pipe and fix it to the skid plate's beam with M10x20 (A) bolts.
3. Fix the beam additionally with M 8x20 bolts and SD3008 (B) threaded insert
4. Install SD3004 (C) threaded inserts with M 10x30 bolts in the apertures of the front axle beam.
5. Place the basis of the skid plate on M 10x30 bolts behind (C). Fix the skid plate to the installed beam with M10x30 bolts (D).
6. Tighten all screw joints.

OPERATING CONDITIONS:

Engine bay and transmission elements skid plate has been designed to operate in conditions specified by vehicle's producer. Cases of crush or driving into obstacles at a speed should be excluded during exploitation. In case of head-on crush it is necessary to assure in absence of damages of vehicle's components and units and availability of roadworthiness on certified service stations.

WARRANTY:

Warranty period - 24 months.

WARRANTY TERMS:

The skid plate should be installed on a vehicle with undamaged body and load-bearing elements (vehicle, which hads never been involved in road traffic accident);
There are no mechanical damages of the skid plate resulting from head-on crush. All requirements to skid plate installation should be satisfied;
There are no mechanical damages of powder coating.
Producer does not bear liability for damages caused to the vehicle, health and life of people in case of installation and exploitation terms violation. Producer has a right to introduce changes into the skid plate construction.

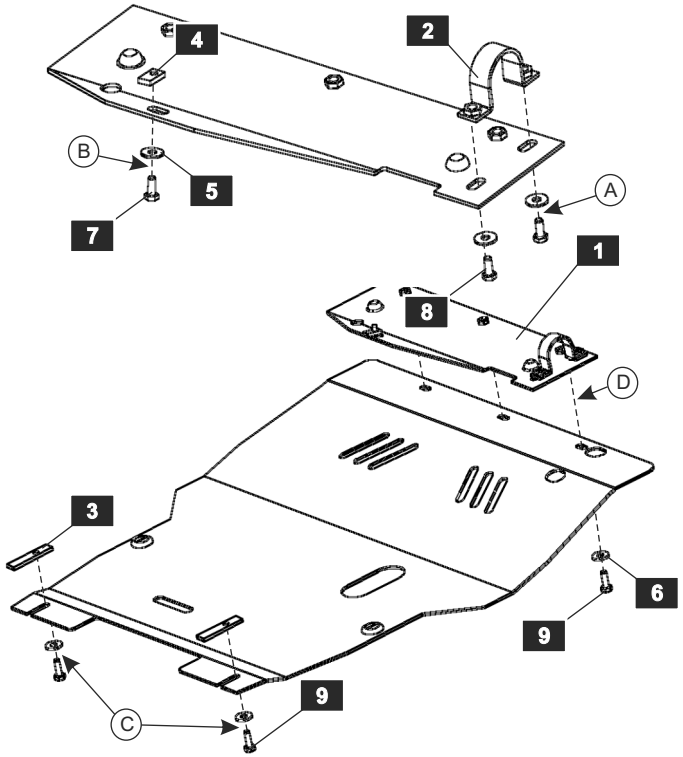

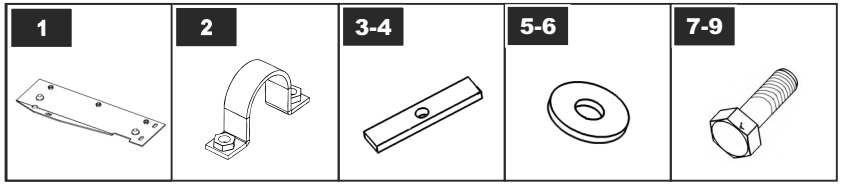

LIST OF PARTS

NO.	NAME	QTY.
1	A front beam	1
2	Clamp	1
3	SD 3004	2
4	SD 3008	1
5	Washer 8	1
6	Washer 10	7
7	Bolt M 8x20	1
8	Bolt M 10x20	2
9	Bolt M 10x30	5

Thread	M6x1.0	M8x1.25	M10x1.5	M12x1.75
Tightening torque	9.8 Nm	24.0 Nm	47.0 Nm	81.0 Nm